200 MPS

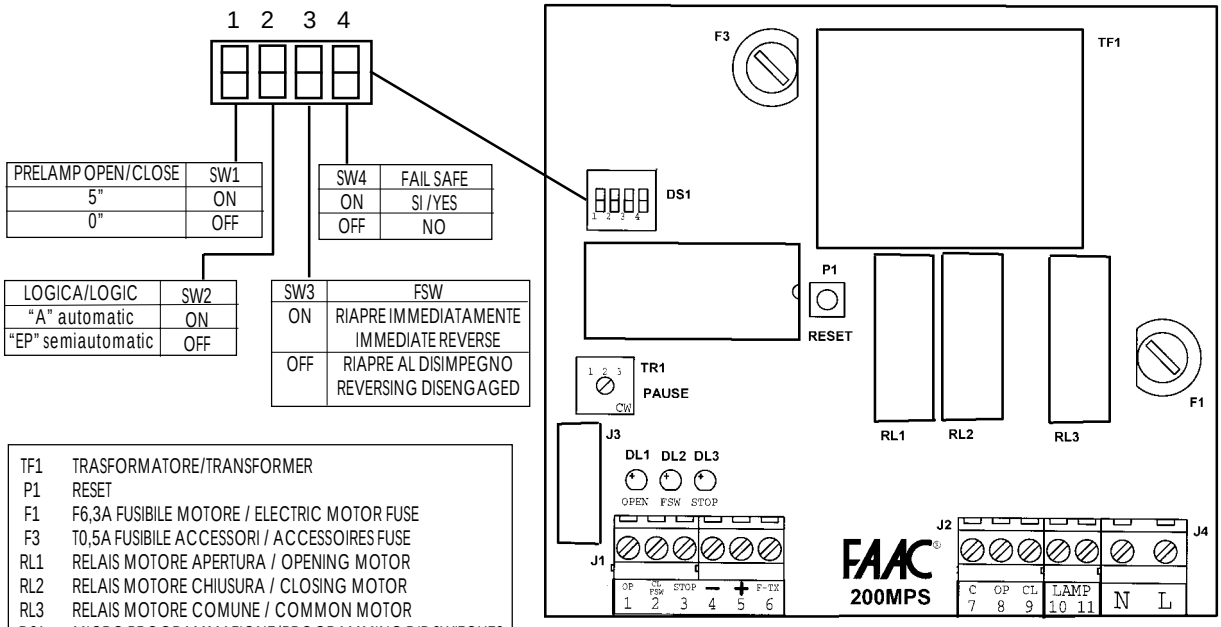

PRELAMP OPEN/CLOSE	SW1
5"	ON
0"	OFF

SW4	FAIL SAFE
ON	SI / YES
OFF	NO

LOGICA/LOGIC	SW2
"A" automatic	ON
"EP" semiautomatic	OFF

SW3	FSW
ON	RIAPRE IMMEDIATAMENTE IMMEDIATE REVERSE
OFF	RIAPRE AL DISIMPEGNO REVERSING DISENGAGED
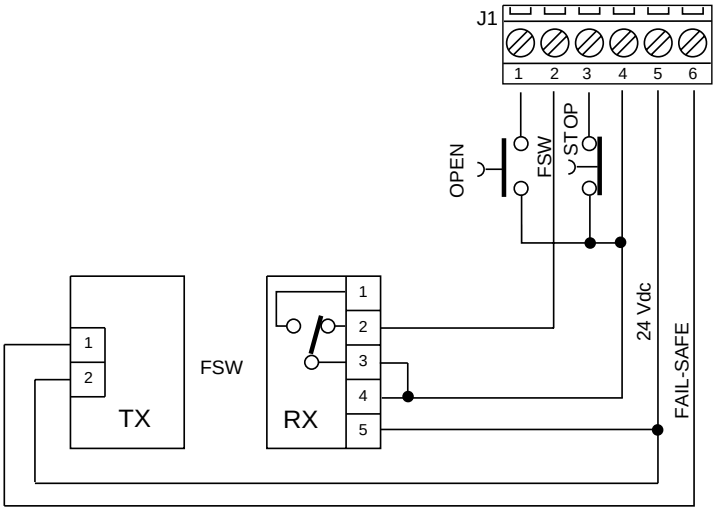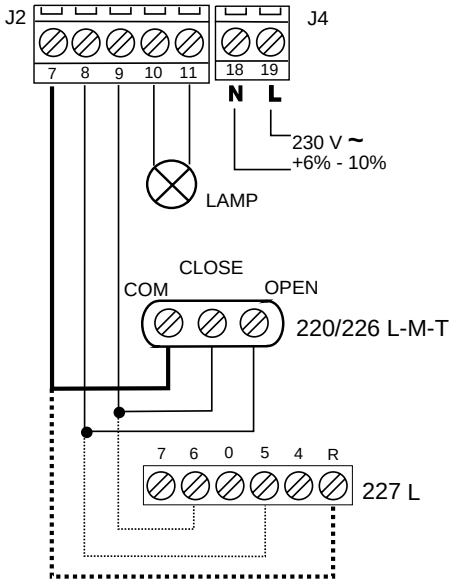
TF1	TRASFORMATORE/TRANSFORMER
P1	RESET
F1	F6,3A FUSIBILE MOTORE / ELECTRIC MOTOR FUSE
F3	T0,5A FUSIBILE ACCESSORI / ACCESSOIRES FUSE
RL1	RELAIS MOTORE APERTURA / OPENING MOTOR
RL2	RELAIS MOTORE CHIUSURA / CLOSING MOTOR
RL3	RELAIS MOTORE COMUNE / COMMON MOTOR
DS1	MICRO PROGRAMMAZIONE/PROGRAMMING DIP SWITCHES
TR1	TRIMMER REGOL. PAUSA / PAUSE TIME
DL1	LED OPEN
DL2	LED SICUREZZE / SAFETY LED
DL3	LED STOP
J1	MORS. INGRESSI / LOW VOLTAGE TERMINAL STRIP
J2	MORS. MOTORE/LAMP / ELCTRIC MOTOR - LAMP
J3	CONNETTORE DECODERDECODER CONNECTOR
J4	MORS ALIMENTAZIONE 230 Vac / POWER SUPPLY.